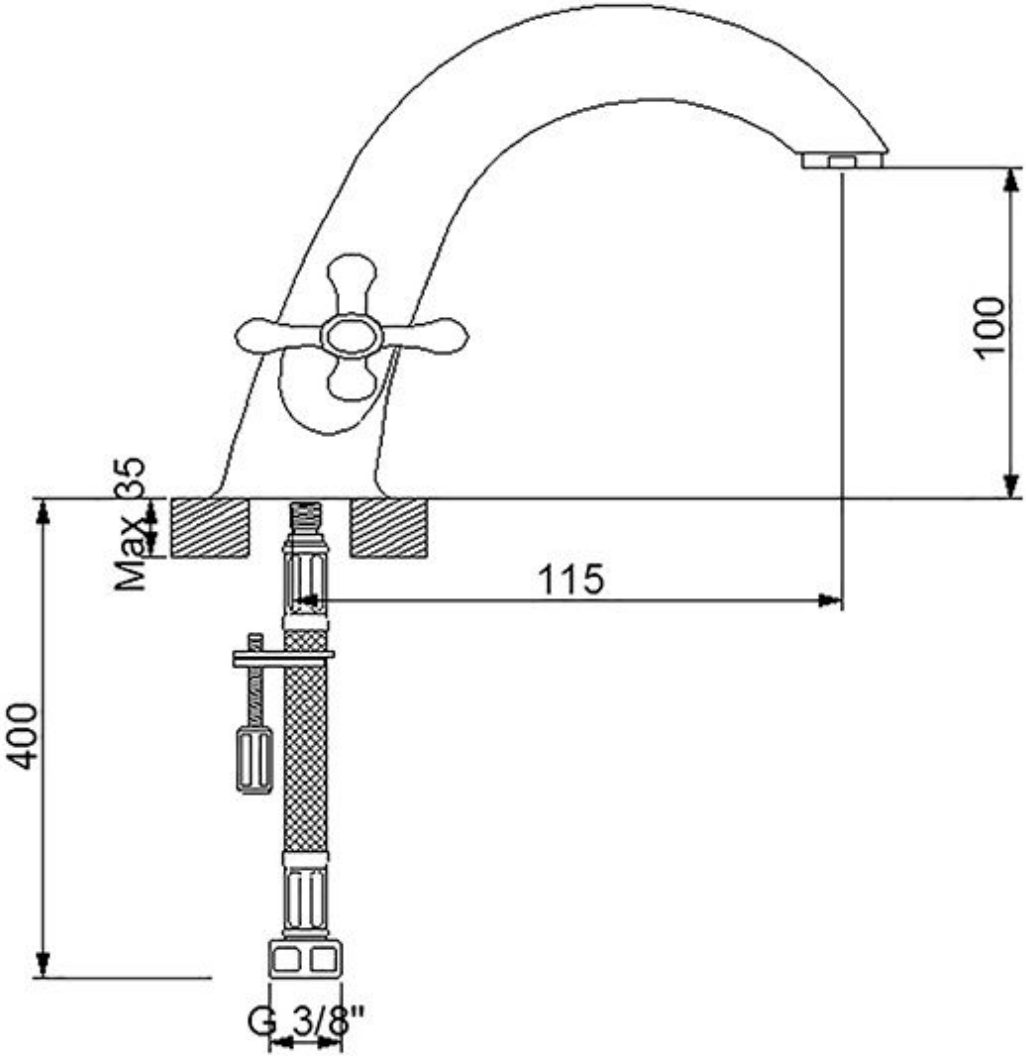
100
Max 35
115
400
G 3/8"